WE RESERVE ALL RIGHTS IN THIS DOCUMENT AND IN THE INFORMATION CONTAINED THERIN. REPRODUCTION, USE OR DISCLOSURE TO THIRD PARTIES WITHOUT EXPRESS AUTHORITY IS STRICTLY FORBIDDEN

© vetropack 2000

FÜER DIESES DOKUMENT UND DEN DARIN DARGESTELLTEN GEGENSTAND BEHALTEN WIR UNS ALLE RECHTE VOR! VERVIELFALTIGUNGEN, BEKANNTGABE AN DRITTE ODER VER-WENDUNG SEINES INHALTS SIND OHNE UNSERE AUSDRUECKLICHE ZUSTIMMUNG VERBOTEN

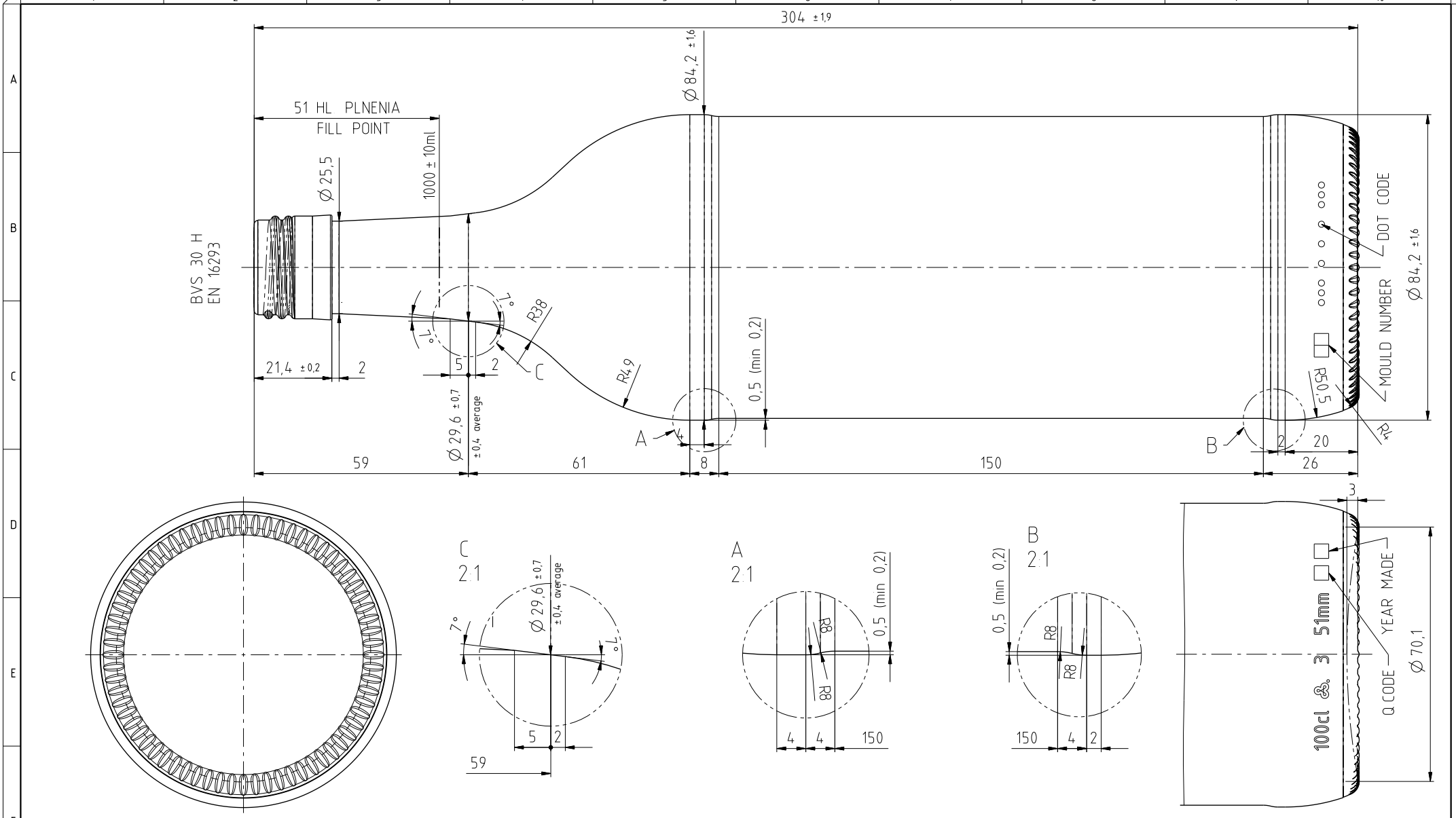

INDEX	ZMENY / modifications	DAT	MENO
B	Hladina plnenia z 57 na 51mm	29.1.15	Sep

SUHLAS TECHNOLOGA PT approved		DAT	VIS
SUH VYRTYMU FtB released	VYRZAVOD VPN	DAT 19.11.14	VIS Far
	VYRZAVOD	DAT	VIS
	VYRZAVOD	DAT	VIS

NETOLEROVANE ROZMERY
PODLA DIN 6129

dimensions without tolerances conform to standard DIN 6129

TEPLOTA PLNENIA Filling temperature	≤ 15 °C		
TEPLOTA SPRACOVANIA Conditioning temperature	≤ °C		
OBSAH CO_2 CO_2 content	≤ g/l		
OBSAH ALKOHOLU Alcohol content	≤ 14 Vol%		
AXIALNE ZATAZENIE Axial pressure	daN		
POUZITIE Disposal	MW	AW	EW X
PROCES Process	BB X	PB	EPB

NOMINAL OBJEM Capacity fillpoint	1000 ml ± 10 ml	POZNAMKA Remarks	
TOTAL OBJEM Capacity brimful	1016 ml ± ml	ZAKAZNIK Customer	
HMOTNOST Approx glass weight	470 g	PODOBNY AKO Similar to	
STREDNA HRUBKA STENY Average wall thickness	2,58 mm	NAHRADZUJE Replace No	
PRIEMER POD USTIM Neck connection dia	25,5 mm	PONUKA CISLO Offer No	E7W0414 1000 3776_B
VNUTORNY PRIMER KALIBRA Min through bore	17 mm	MIERKA Scale	
FARBA Color		KRESLIL Des Cem	DAT 19.11.14
		DATA TYP Filetyp	AZ

vetropack
Vetropack Nemšová s.r.o.
SK-91441 Nemšová
Tel. 00421-032 6557 111
www.vetropack.com

VPN-0701-01-FOR-006-SK/EN

NAZOV VYROBKU
Designation
Bordeaux FF 1000 ml

VYROBOK CISLO
Item No
7W123 1000 3776

INDEX
B

Date: 29-Jan-15 Time: 14:07 Message: Vetropack to SAP released drawing: Original is archived at the designoffice